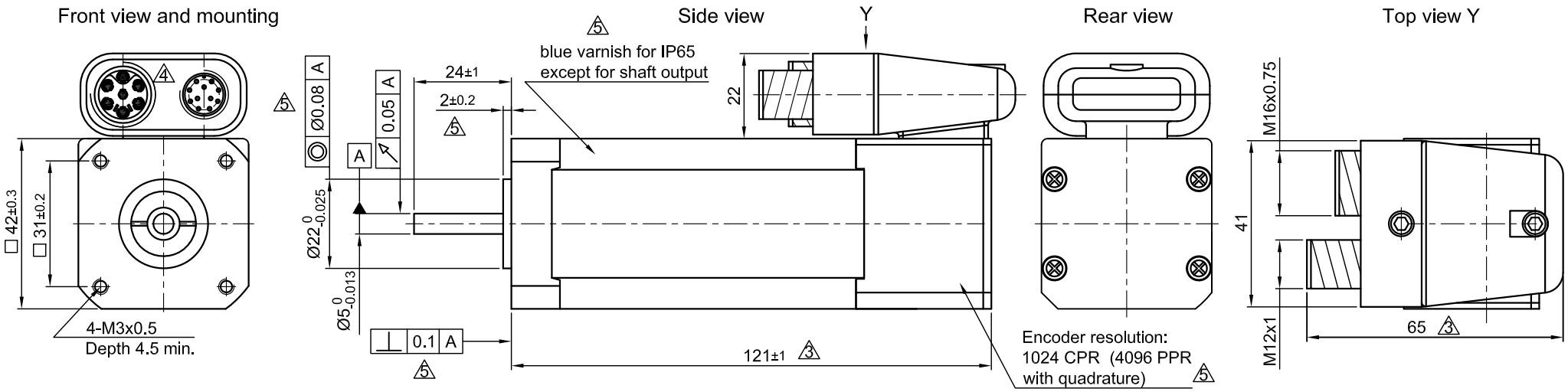

SPECIFICATION / CONNECTION	DELTA
NO. OF POL./PHASE	8/3
VOLTAGE RATED (VDC)	48
CURRENT NO LOAD/RATED/PEAK (AMP)	0.4/4.63/13.89
RESISTANCE/PHASE TO PHASE (Ohms) @25°C	0.58±15%
INDUCTANCE/PHASE TO PHASE (mH) @1KHz	1.21±20%
TORQUE RATED/PEAK (Nm) [lb-in]	0.25/0.75 [2.213/6.638]
TORQUE CONSTANT (Nm/A) 5	0.054
POWER RATED/PEAK (W)	160/650
SPEED RATED/NO LOAD (RPM)	6000/8500
ROTOR INERTIA (Kg-m²) [lb-in²]	9.6×10^{-6} [3.28×10^{-2}]
WEIGHT (Kg) [lb]	0.75 [1.654]

TEMPERATURE RISE: MAX.80°C

AMBIENT TEMPERATURE -10°~ 50°C [14°F ~ 122°F]

INSULATION RESISTANCE 100 MOhm (UNDER NORMAL TEMPERATURE AND HUMIDITY)

INSULATION CLASS B 130° [266°F]

DIELECTRIC STRENGTH 500VAC FOR 1 MIN. (BETWEEN THE MOTOR COILS AND THE MOTOR CASE)

AMBIENT HUMIDITY MAX. 85% (NO CONDENSATION)

PERMISSIBLE RADIAL+AXIAL FORCE

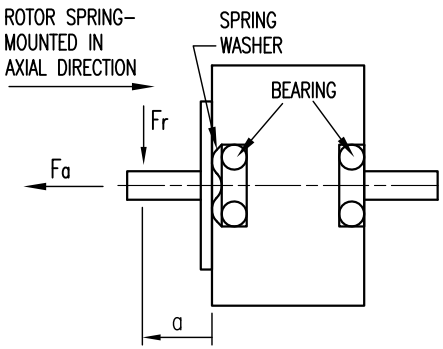

AXIAL-FORCE Fa (N)	Fa=10	
DISTANCE a (mm)	20	
RADIAL-FORCE Fr (N)	28	
	AXIAL	RADIAL
SHAFT PLAY (mm)	0.08	0.02
AT LOAD MAX: (N)	4.5	4.5

TWINTUS CONNECTOR M12 12 POLE	
PIN NO.	ENC./HALL
1	GND 1
2	5 V
3	GND
4	A
5	A\
6	B
7	B\
8	I
9	I\
10	H1
11	H2
12	H3

TWINTUS CONNCTOR M16 6 POLE 4	
PIN NO.	FUNCTION
1	U
2	n.c
3	V
4	n.c.
5	W
6	n.c.
PE	PE

WIRING DIAGRAMM						
FUNCTION	Dir. ← →					
U	X	HI	HI	X	LOW	LOW
V	HI	X	LOW	LOW	X	HI
W	LOW	LOW	X	HI	HI	X
+5V						
H1	0	0	0	1	1	1
H2	0	1	1	1	0	0
H3	1	1	0	0	0	1
GND						

REV	DESCRIPTION	DATE	DRN
5	rework draw	14.01.16	A.S.
4	M16 CONNECTOR WITH 6 POLE	01.10.12	J.W.
3	LENGTH CHANGED	07.03.12	J.W.

Nanotec® PLUG & DRIVE

Surface specification DIN ISO 1302 | General tolerances DIN ISO 2768- cH | Work piece edge DIN ISO 13715

APVD	S.H.	28.07.11
CHKD		
DRN	J.W.	28.07.11
SIGNATURE		DATE

DC MOTOR IN PROTECTION

DWG.NO ASB42C048060-ENM